DRG No. CP12073-B	REMOVE BURRS AND SHARP EDGES	IF IN DOUBT ASK	DO NOT SCALE	THIRD ANGLE PROJECTION

FRAME E1
(IP21/IP54/UL AND NEMA1/NEMA12)
250/315 - 400/450 kW (400V) 355/450 - 560/630 kW (690V)
350/450 - 550/600 HP (460V) 400/450 - 600/650 HP (575V)

KW RATING	MAX. FUSE SIZE AT 380-500V	NOISE RATING 50% dBA	NOISE RATING 100% dBA	WEIGHT Kgs.
315	700A	73	74	313
355	900A	73	74	313
400	900A	73	74	313
450	900A	73	74	313

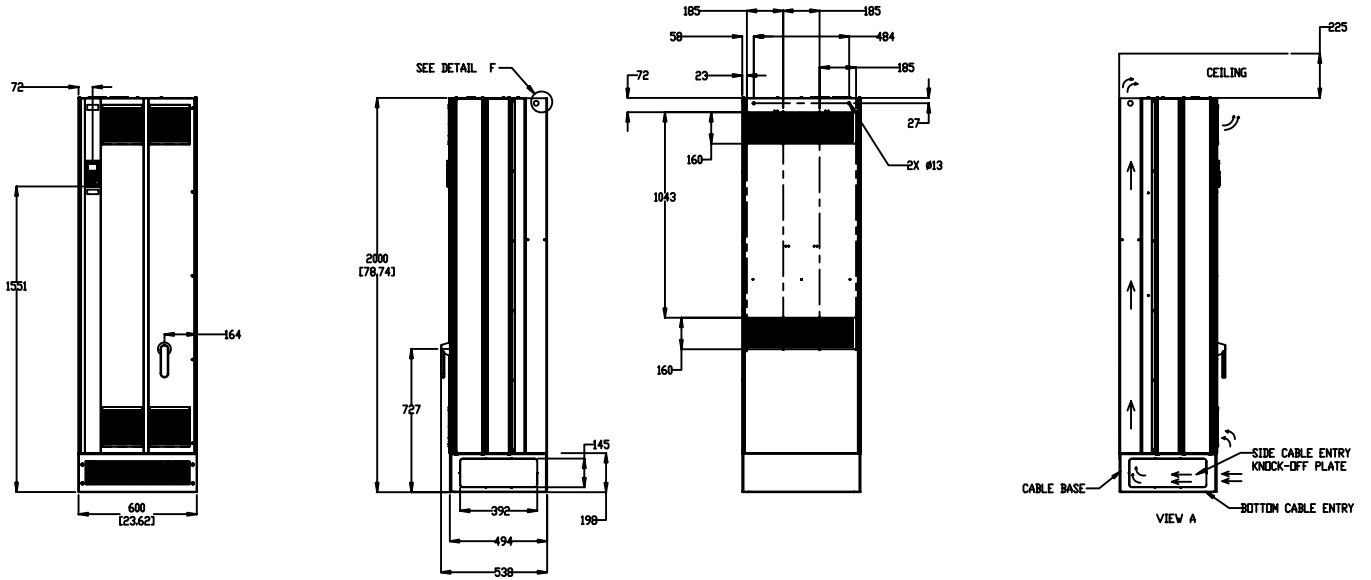

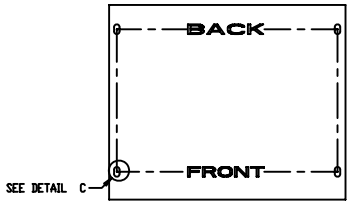

FLOOR MOUNTING HOLE PATTERN
(USE M12 BOLT TO MOUNT DRIVE TO FLOOR)

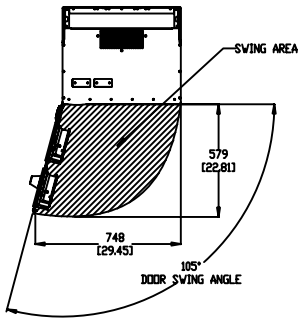

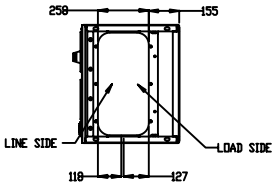

PLACE CONDUITS IN MAKED AREA.

VLT WEIGHTS (STANDARD INPUT OPTION, NO BRAKE AND NO LOADSHARE)			
FRAME	IP00/CHASSIS	FRAME	IP21 AND IP54/UL AND NEMA TYPE 1 AND 12
E2	610 LBS (277.3KG)	E1	689 LBS (313.2 KG)

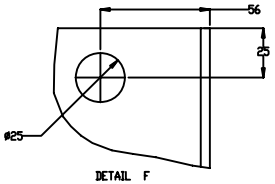

DETAIL F
SCALE 1.000

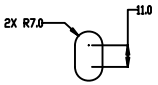

DETAIL C
SCALE 1.000

VLT COOLING:

THE VLT FREQUENCY CONVERTER MUST BE INSTALLED VERTICALLY WITH THE MINIMUM FREE SPACE SHOWN IN VIEW - A. ALL IP21/UL NEMA TYPE 1 AND IP54/UL NEMA TYPE 12 UNITS MAY BE MOUNTED SIDE BY SIDE, WITH NO MINIMUM CLEARANCE.

FAILURE TO REMOUNT GLAND PLATE WILL HAVE A NEGATIVE INFLUENCE ON THE UNITS INTERNAL COOLING CAPACITY AND CAN CAUSE TRIP FAULTS.

LAST MODIFICATION DETAILS		
SEE ECO 8785 (AHBP) TITLE WAS FC102		
ISSUE B	DATE09/07/2009	DRN BSD
	CHK BSD	APP PK

ALL DIMENSIONS IN mm
DRAWN TO BS308
WELDING SYMBOLS TO BS499
SURFACE FINISH SHOWN IN MICROMETERS
MACHINE WHERE SHOWN ∀
TO TOLERANCE ± 0.3MM
UNLESS OTHERWISE STATED

JOB No.	PART No.	WEIGHT KG	FILE NAME
-	-	-	-
DESIGN No.	PATTERN No.	MATERIAL	MAT'L SPEC.
-	-	-	-

THIS DRAWING IS THE PRIVATE AND CONFIDENTIAL PROPERTY OF ARMSTRONG HOLDEN BROOKE PULLEN LTD. ALL COPYRIGHT, MANUFACTURING AND SALES RIGHTS RESERVED.

TITLE
IVS102 FREQUENCY INVERTER DRIVE
E1 & 2 CHASSIS

DRG No. CP12073-B	
DATE28/05/2009	DRN BSD
CHK BSD	APP PK
SCALE 1:10	SHEET 1 OF 1

ARMSTRONG
WENLOCK WAY, MANCHESTER. M12 5JL
TEL: +44 (0) 161 223 2223