ARMSTRONG®

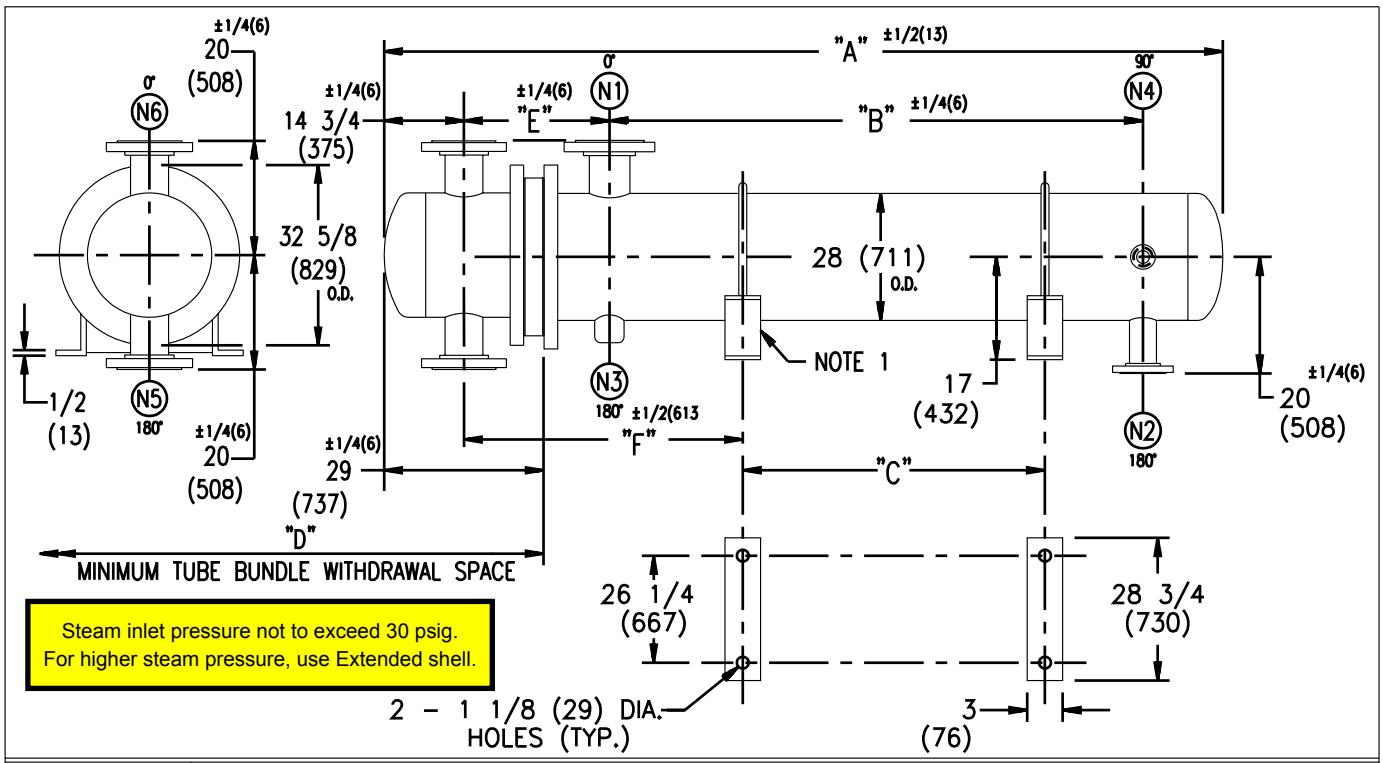

Steam inlet pressure not to exceed 30 psig.
For higher steam pressure, use Extended shell.

EXCHANGER SIZE	DIMENSIONS															
	A		B		C		D		E		F		N1		N2	
	inches	mm	inches	mm	inches	mm	inches	mm	inches	mm	inches	mm	inches	mm	inches	mm
WS-283-2-4	70	1778	18 7/8	479	3	76	43	1092	25 3/4	654	33 1/2	851	12	305	4	102
WS-284-2-4	82	2083	30 7/8	784	15	381	55	1397	25 3/4	654	33 1/2	851	12	305	4	102
WS-285-2-4	94	2388	41 7/8	1064	25 1/4	641	67	1702	26 3/4	679	35 1/4	895	14	356	4	102
WS-286-2-4	106	2692	51 5/8	1311	33	838	79	2007	28	711	37 1/2	953	16	406	6	152
WS-287-2-4	118	2997	63 5/8	1616	45	1143	91	2311	28	711	37 1/2	953	16	406	6	152
WS-288-2-4	130	3302	74 7/8	1902	55 1/4	1403	103	2616	28 3/4	730	39 1/4	997	18	457	6	152
WS-289-2-4	142	3607	86 7/8	2207	67 1/4	1708	115	2921	28 3/4	730	39 1/4	997	18	457	6	152
WS-2810-2-4	154	3912	97 5/8	2480	77	1956	127	3226	30	762	41 1/2	1054	20	508	6	152
WS-2811-2-4	166	4216	107 5/8	2734	84 3/4	2153	139	3531	31	787	43 1/2	1105	22	559	8	203
WS-2812-2-4	178	4521	119 5/8	3038	96 3/4	2457	151	3835	31	787	43 1/2	1105	22	559	8	203
WS-2813-2-4	190	4826	131 5/8	3343	108 3/4	2762	163	4140	31	787	43 1/2	1105	22	559	8	203
WS-2814-2-4	202	5131	141 1/4	3588	116 1/4	2953	175	4445	32 1/4	819	45 5/8	1159	24	610	10	254
WS-2815-2-4	214	5436	153 1/4	3893	128 1/4	3258	187	4750	32 1/4	819	45 5/8	1159	24	610	10	254

NOZZLE SCHEDULE

SERVICE	MARK	SHELL SIDE	MARK	TUBE SIDE
INLET	N1	AS PER TABLE ANSI (RF) FLG	N5	12 (305) ANSI (RF) FLG
OUTLET	N2	AS PER TABLE ANSI (RF) FLG	N6	12 (305) ANSI (RF) FLG
DRAIN	N3	3/4 (19) NPT		
VENT	N4	3/4 (19) NPT		

NOTES:
1. SUPPORTS SUPPLIED ONLY IF SPECIFIED ON ORDER.
2. NOZZLE SIZES SHOWN ARE RECOMMENDED FOR MAXIMUM EXCHANGER LIFE.
3. FABRICATED TO ASME CODE SECTION VIII DIVISION 1 AND LATEST ADDENDA.
4. DRAWING IS NOT TO SCALE.
5. ALL DIMN'S ±1/8 (3) UNLESS OTHERWISE SHOWN.

DESIGN CONDITIONS

	SHELL	TUBES
DESIGN PRESSURE	150 PSIG (1034 kpa)	150 PSIG (1034 kpa)
DESIGN TEMPERATURE	375 °F (191 °C)	375 °F (191 °C)
MIN. DESIGN METAL TEMP.	40 °F (4.4°C)	40 °F (4.4°C)
HYDRO. TEST PRESSURE	225 PSIG (1551 kpa)	225 PSIG (1551 kpa)
CONTENTS	STEAM	WATER

CUSTOMER:
LOCATION:

ORDER No.:
PROJECT/JOB:
LOCATION:
TAG: (QUOTE #)

TITLE 150 LB. W SERIES HEAT EXCHANGERS

DATE :-SEP./15/99 BY :- AP/AG

A R M S T R O N G

TORONTO - CANADA TEL : (416) 755-2291
MONTREAL - CANADA TEL : (514) 421-2424
BUFFALO - N. Y. TEL: (716) 693-8813
COLCHESTER - U.K. TEL: (44) 120-657-9491

NUMBER WS-28-2P-4

REV.

© S.A. Armstrong Limited 1999