ARMSTRONG®

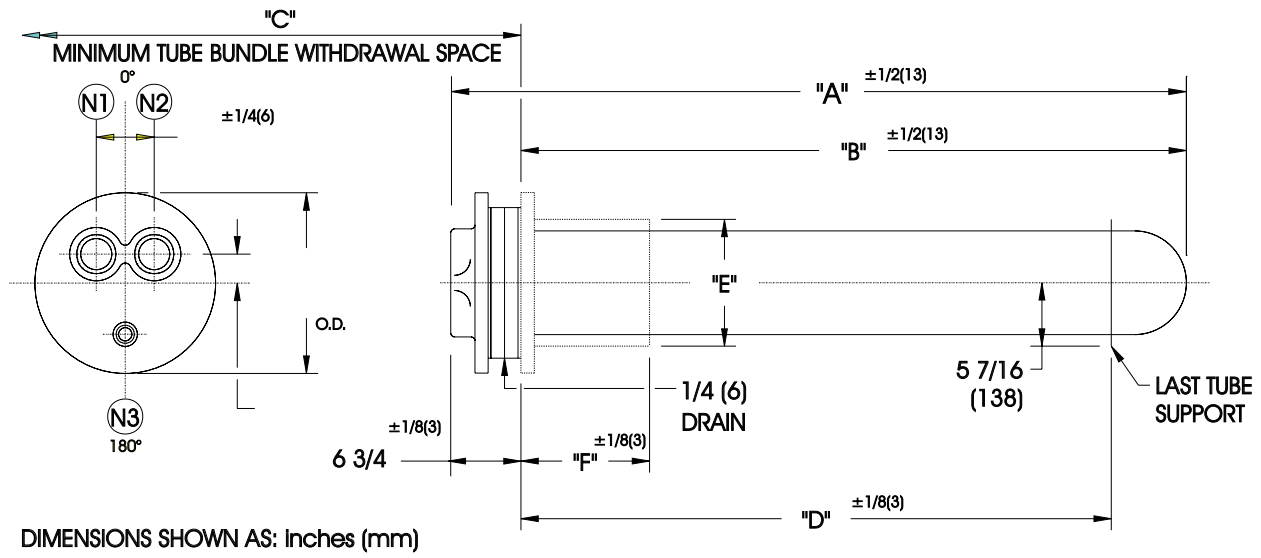

DIMENSIONS SHOWN AS: Inches (mm)

EXCHANGER SIZE	DIMENSIONS							
	"A"		"B"		"C"		"D"	
	inches	mm	inches	mm	inches	mm	inches	mm
THWX-1236-4-1	42-1/2	1080	35-3/4	908	38	965	24-5/16	618
THWX-1242-4-1	48-1/2	1232	41-3/4	1060	44	1118	30-5/16	770
THWX-1248-4-1	54-1/2	1384	47-3/4	1213	50	1270	36-5/16	922
THWX-1254-4-1	60-1/2	1537	53-3/4	1365	56	1422	42-5/16	1075
THWX-1260-4-1	66-1/2	1689	59-3/4	1518	62	1575	48-5/16	1227
THWX-1266-4-1	72-1/2	1842	65-3/4	1670	68	1727	54-5/16	1380
THWX-1272-4-1	78-1/2	1994	71-3/4	1822	74	1880	60-5/16	1532
THWX-1278-4-1	84-1/2	2146	77-3/4	1975	80	2032	66-5/16	1684
THWX-1284-4-1	90-1/2	2298	83-3/4	2127	86	2184	72-5/16	1837
THWX-1290-4-1	96-1/2	2451	89-3/4	2280	92	2337	78-5/16	1989
THWX-1296-4-1	102-1/2	2604	95-3/4	2432	98	2489	84-5/16	2142
THWX-12102-4-1	108-1/2	2756	101-3/4	2584	104	2642	90-5/16	2294
THWX-12108-4-1	114-1/2	2908	107-3/4	2737	110	2794	96-5/16	2446
THWX-12114-4-1	120-1/2	3061	113-3/4	2889	116	2946	102-5/16	2599
THWX-12120-4-1	126-1/2	3213	119-3/4	3042	122	3099	108-5/16	2751
THWX-12126-4-1	132-1/2	3366	125-3/4	3194	128	3251	114-5/16	2904
THWX-12132-4-1	138-1/2	3518	131-3/4	3346	134	3404	120-5/16	3056
THWX-12138-4-1	144-1/2	3670	137-3/4	3499	140	3556	126-5/16	3208
THWX-12144-4-1	150-1/2	3823	143-3/4	3651	146	3708	132-5/16	3361
THWX-12150-4-1	156-1/2	3975	149-3/4	3804	152	3861	138-5/16	3513
THWX-12156-4-1	162-1/2	4128	155-3/4	3956	158	4013	144-5/16	3666
THWX-12162-4-1	168-1/2	4280	161-3/4	4108	164	4166	150-5/16	3818

NOZZLE SCHEDULE

N1	INLET	4" NPT	(102)
N2	OUTLET	4" NPT	(102)
N3	DRAIN	1/2" NPT	(13)

COLLAR ASSEMBLY

	STANDARD	OVS. FOR STONE LINING
"E"	12-3/4" (324)	14" (356)
"F"	10" (254)	10-1/2" (267)

DESIGN CONDITIONS

	TUBES	
DESIGN PRESSURE	125 PSIG	862 KPa
DESIGN TEMPERATURE	300 F	149 C
M.D.M.T.	35 F	1.7 C
HYD. TEST PRESSURE	250 PSIG	1723 KPa

NOTES:
1. COLLAR ASSEMBLY SUPPLIED SEPARATELY.
2. FABRICATED TO ASME CODE SECTION VIII DIVISION 1 AND LATEST ADDENDA.
3. DRAWING IS NOT TO SCALE.
4. ALL DIMN'S 1/8 (3) UNLESS OTHERWISE SHOWN.
5. DIMENSIONS SHOWN AS: in.(mm)

CUSTOMER:
LOCATION:

ENGINEER :

ORDER No.:

PROJECT/JOB:
LOCATION:

TAG:
QUOTE #

TITLE	ARMSTRONG	NUMBER	REV.
G.A. 125 LB. TANK HEATERS	TORONTO - CANADA TEL : (416) 755-2291 · MONTREAL - CANADA TEL : (514) 421-2424 · BUFFALO - N. Y. TEL: (716) 693-8813 · COLCHESTER - U.K. TEL: (44) 120-657-9491	Thwx-12-4P-1	
DATE : 11/07/94 BY : D.C.R.			

© S.A. Armstrong Limited 1999