ARMSTRONG®

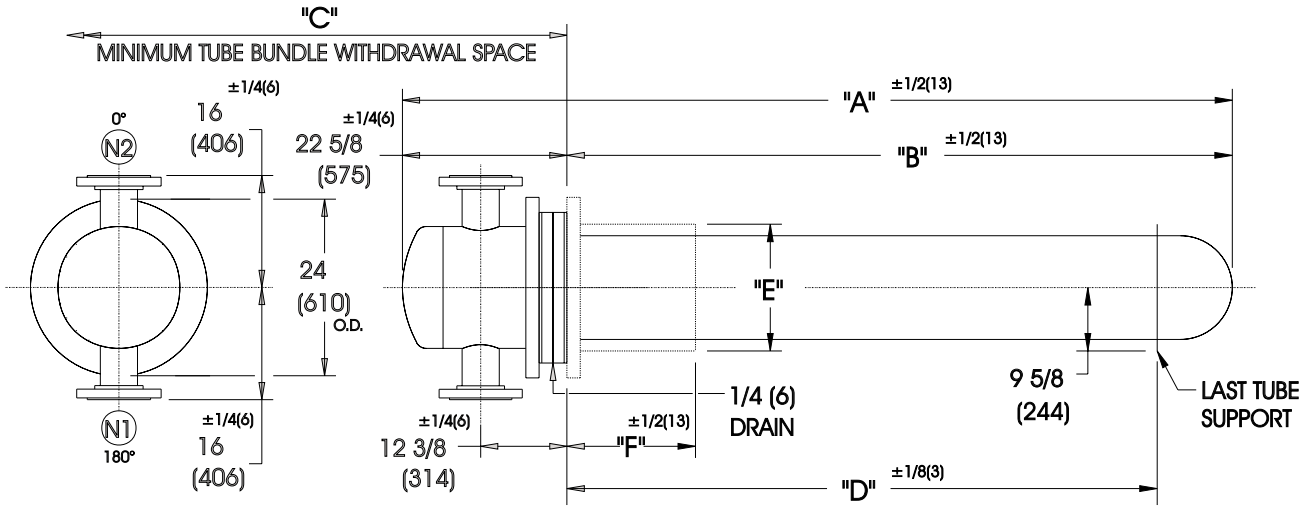

DIMENSIONS SHOWN AS: inches (mm)

EXCHANGER SIZE	DIMENSIONS							
	"A"		"B"		"C"		"D"	
	inches	mm	inches	mm	inches	mm	inches	mm
THWX-2030-2-4	52 -1/8	1324	29-1/2	749	33	838	13-3/8	340
THWX-2036-2-4	58 -1/8	1476	35-1/2	902	39	991	19-3/8	492
THWX-2042-2-4	64 -1/8	1629	41-1/2	1054	45	1143	25-3/8	645
THWX-2048-2-4	70 -1/8	1781	47-1/2	1207	51	1295	31-3/8	797
THWX-2054-2-4	76 -1/8	1934	53-1/2	1359	57	1448	37-3/8	949
THWX-2060-2-4	82 -1/8	2086	59-1/2	1511	63	1600	43-3/8	1102
THWX-2066-2-4	88 -1/8	2238	65-1/2	1664	69	1753	49-3/8	1254
THWX-2072-2-4	94 -1/8	2391	71-1/2	1816	75	1905	55-3/8	1407
THWX-2078-2-4	100-1/8	2543	77-1/2	1969	81	2057	61-3/8	1559
THWX-2084-2-4	106-1/8	2696	83-1/2	2121	87	2210	67-3/8	1711
THWX-2090-2-4	112-1/8	2848	89-1/2	2274	93	2362	73-3/8	1864
THWX-2096-2-4	118-1/8	3000	95-1/2	2426	99	2515	79-3/8	2016
THWX-20102-2-4	124-1/8	3153	101-1/2	2578	105	2667	85-3/8	2169
THWX-20108-2-4	130-1/8	3305	107-1/2	2731	111	2819	91-3/8	2321
THWX-20114-2-4	136-1/8	3458	113-1/2	2883	117	2972	97-3/8	2473
THWX-20120-2-4	142 -1/8	3610	119-1/2	3035	123	3124	103-3/8	2626
THWX-20126-2-4	148 -1/8	3762	125-1/2	3188	129	3277	109-3/8	2778
THWX-20132-2-4	154 -1/8	3915	131-1/2	3340	135	3429	115-3/8	2931
THWX-20138-2-4	160 -1/8	4067	137-1/2	3493	141	3581	121-3/8	3083
THWX-20144-2-4	166 -1/8	4220	143-1/2	3645	147	3734	127-3/8	3235
THWX-20150-2-4	172 -1/8	4372	149-1/2	3797	153	3886	133-3/8	3388
THWX-20156-2-4	178 -1/8	4524	155-1/2	3950	159	4039	139-3/8	3540
THWX-20162-2-4	184 -1/8	4677	161-1/2	4102	165	4191	145-3/8	3693

NOZZLE SCHEDULE

N1	INLET	8" FLG	(203)
N2	OUTLET	8" FLG	(203)

COLLAR ASSEMBLY

	STANDARD		OVS. FOR STONE LINING	
"E"	20"	(508)	22"	(559)
"F"	14"	(254)	16-1/2"	(419)

DESIGN CONDITIONS

	TUBES	
DESIGN PRESSURE	150 PSIG	1034 KPa
DESIGN TEMPERATURE	375 F	191 C
M.D.M.T.	40 F	4.4 C
HYDRO TEST PRESSURE	225 PSIG	1551 KPa

NOTES:
1. COLLAR ASSEMBLY SUPPLIED SEPARATELY.
2. FABRICATED TO ASME CODE SECTION VIII DIVISION 1 AND LATEST ADDENDA.
3. DRAWING IS NOT TO SCALE.
4. ALL DIMN'S 1/8 (3) UNLESS OTHERWISE SHOWN.
5. DIMENSIONS SHOWN AS: In.(mm)

CUSTOMER:
LOCATION:

ENGINEER :
ORDER No.:
PROJECT/JOB:
LOCATION:

TAG:
QUOTE #

TITLE G.A. 150 LB. TANK HEATERS

DATE : 24/05/95 BY : D.C.R

ARMSTRONG

TORONTO - CANADA TEL : (416) 755-2291
MONTREAL - CANADA TEL : (514) 421-2424
BUFFALO - N. Y. TEL: (716) 693-8813
COLCHESTER - U.K. TEL: (44) 120-657-9491

NUMBER Thwx-20-2P-4

REV.

© S.A. Armstrong Limited 1999